Work Order ID 54580

December 14, 2009 10:46:10 AM

Item ID: D3508-9 **Accept** **Setup** **Start** **Stop**

Revision ID:

Item Name: Wearplate

Start Date: 14/12/2009 **Start Qty:** 10.00 **Cust Item ID:**

Required Date: 18/12/2009 **Req'd Qty:** 10.00 **Customer:**

Reference:

Run **Start** **Stop**

Approvals: **Process Plan:** Pl **Date:** 09-12-14 **Tooling:** **Date:**

QC: **Date:** **SPC (Y/N):** **Date:**

Sequence ID/ Work Center ID	Operation Description	Set Up/ Run Hours	Draw Number	Draw Rev.	Plan Code	Accept Qty	Reject Qty	Reject Number	Insp. Stamp

Draw Nbr	Revision Nbr
D3508	Rev C

Sequence ID/ Work Center ID	Operation Description	Set Up/ Run Hours	Draw Number	Draw Rev.	Plan Code	Accept Qty	Reject Qty	Reject Number	Insp. Stamp
100 Waterjet FLOW CNC Waterjet 304 . 040	FLOW WATER JET **Memo** 1-Cut as per Dwg D3508 ☐Dwg Rev: C ☐Prog Rev: C ☐2-Deburr if necessary	0.00 0.00				HB 10-1-11			
110 QC Quality Control	QC2- Inspect parts off machine FAI/FAIB **Memo**	0.00 0.00				HB 10-1-11			
120 QC Quality Control	QC8- Inspect parts - second check **Memo**	0.00 0.00 => δ 10/01/11				(x11)			P10 →

Dart Aerospace Ltd

W/O:		WORK ORDER CHANGES					
DATE	**STEP**	**PROCEDURE CHANGE**	**By**	**Date**	**Qty**	**Approval** Chief Eng / Prod Mgr	**Approval** QC Inspector
10/01/11	#120	Took Qty #1 Part for QC inspection template	S	10/1/11	#1		S 10/01/11

Part No: _____ **PAR #:** _____ **Fault Category:** _____ **NCR:** Yes No **DQA:** _____ **Date:** _____

Resolution: _____ **Disposition:** _____ **QA: N/C Closed:** _____ **Date:** _____

NCR:		WORK ORDER NON-CONFORMANCE (NCR)						
DATE	**STEP**	**Description of NC** Section A	**Corrective Action** Section B			**Verification** Section C	**Approval** Chief Eng	**Approval** QC Inspector
			Initial Chief Eng	**Action Description** Chief Eng	**Sign & Date**			

NOTE: Date & initial all entries

Work Order ID 54580

December 14, 2009 10:46:10 AM

Item ID: D3508-9 **Accept** **Setup Start** **Stop**

Revision ID:

Item Name: Wearplate

Start Date: 14/12/2009 **Start Qty:** 10.00 **Cust Item ID:**

Required Date: 18/12/2009 **Req'd Qty:** 10.00 **Customer:**

Reference:

Run Start **Stop**

Approvals: **Process Plan:** _____ **Date:** _____ **Tooling:** _____ **Date:** _____

QC: _____ **Date:** _____ **SPC (Y/N):** _____ **Date:** _____

Sequence ID/ Work Center ID	Operation Description	Set Up/ Run Hours	Draw Number	Draw Rev.	Plan Code	Accept Qty	Reject Qty	Reject Number	Insp. Stamp
130	NC BRAKE	0.00				11	0		
Brake NC	**Memo**	0.00							
Brake NC	Deburr and form on brake using DT8326 and DT8261as per Dwg D3508								
140	QC5- Inspect part completeness to step on W/O	0.00							
QC	**Memo**	0.00							
Quality Control									
150	Grey Sandtex(Ref:4.3.5.6) per QSI005 4.3	0.00							
Powdercoat	**Memo**	0.00							
Powder Coating	START TIME: 3:30 pm OVEN TEMPERATURE: 400°F FINISH TIME: 320°F								

IM112588

Dart Aerospace Ltd

W/O:		WORK ORDER CHANGES					
DATE	**STEP**	**PROCEDURE CHANGE**	**By**	**Date**	**Qty**	**Approval** Chief Eng / Prod Mgr	**Approval** QC Inspector

Part No: _____ **PAR #:** _____ **Fault Category:** _____ **NCR:** Yes No **DQA:** _____ **Date:** _____

Resolution: _____ **Disposition:** _____ **QA: N/C Closed:** _____ **Date:** _____

NCR:		WORK ORDER NON-CONFORMANCE (NCR)						
DATE	**STEP**	**Description of NC** Section A	**Corrective Action** Section B			**Verification** Section C	**Approval** Chief Eng	**Approval** QC Inspector
			Initial Chief Eng	**Action Description** Chief Eng	**Sign & Date**			

NOTE: Date & initial all entries

Work Order ID 54580

December 14, 2009 10:46:10 AM

Item ID: D3508-9 **Accept** **Setup Start** **Stop**

Revision ID:

Item Name: Wearplate

Start Date: 14/12/2009 **Start Qty:** 10.00 **Cust Item ID:**

Required Date: 18/12/2009 **Req'd Qty:** 10.00 **Customer:**

Reference:

Approvals: **Process Plan:** _____ **Date:** _____ **Tooling:** _____ **Date:** _____ **Run Start** **Stop**

QC: _____ **Date:** _____ **SPC (Y/N):** _____ **Date:** _____

Sequence ID/ Work Center ID	Operation Description	Set Up/ Run Hours	Draw Number	Draw Rev.	Plan Code	Accept Qty	Reject Qty	Reject Number	Insp. Stamp
160	QC3- Inspect Part Finish	0.00	BK	10-01-19		(11)	Ø		
QC	**Memo**	0.00							
Quality Control									
170	Identify as per dwg & Stock Location: FP-21	0.00	MH	10-01-19		X11	Ø		
Packaging	**Memo**	0.00							
Packaging									
180	QC21- Final Inspection - Work Order Release	0.00							10/01/20
QC	**Memo**	0.00							
Quality Control									

MF 10-1-19

Dart Aerospace Ltd

W/O:		WORK ORDER CHANGES					
DATE	**STEP**	**PROCEDURE CHANGE**	**By**	**Date**	**Qty**	**Approval** Chief Eng / Prod Mgr	**Approval** QC Inspector

Part No: _____ **PAR #:** _____ **Fault Category:** _____ **NCR:** Yes No **DQA:** _____ **Date:** _____

Resolution: _____ **Disposition:** _____ **QA: N/C Closed:** _____ **Date:** _____

NCR:		WORK ORDER NON-CONFORMANCE (NCR)						
DATE	**STEP**	**Description of NC** Section A	**Corrective Action** Section B			**Verification** Section C	**Approval** Chief Eng	**Approval** QC Inspector
			Initial Chief Eng	**Action Description** Chief Eng	**Sign & Date**			

NOTE: Date & initial all entries

Picklist Print

December 14, 2009 10:46:14 AM

Work Order ID: 54580

Parent Item: D3508-9

Parent Item Name: Wearplate

Comments:

Start Date: 14/12/2009 **Required Date:** 18/12/2009

Start Qty: 10.00 **Required Qty:** 10.00

Component Item ID/ Item Name	Replacement Item ID	Mfg/ Purch	Bin Item	Primary Location	Last Location	Route Seq ID	Unit of Measure	Qty on Hand	Remaining Qty To Pick	Qty Issued	Date Issued	Status
M304S20GA		Purchased	No			100	sf	306.3536	4.3895	5.3	1B 10-1-11	

304/316 .040 Sheet

Warehouse Location	Loc Qty	Loc Code
Main Warehouse		
MAT	306.3536158	
110076	1.37053684	
112567	38.0765789	
112885	83.1578	4
113062	166.3723	
113077	17.3764	13077

Dart Aerospace Ltd

W/O:		WORK ORDER CHANGES					
DATE	**STEP**	**PROCEDURE CHANGE**	**By**	**Date**	**Qty**	**Approval** Chief Eng / Prod Mgr	**Approval** QC Inspector

Part No: _____ **PAR #:** _____ **Fault Category:** _____ **NCR:** Yes No **DQA:** _____ **Date:** _____

Resolution: _____ **Disposition:** _____ **QA: N/C Closed:** _____ **Date:** _____

NCR:		WORK ORDER NON-CONFORMANCE (NCR)						
DATE	**STEP**	**Description of NC** Section A	**Corrective Action** Section B			**Verification** Section C	**Approval** Chief Eng	**Approval** QC Inspector
			Initial Chief Eng	**Action Description** Chief Eng	**Sign & Date**			

NOTE: Date & initial all entries

DART AEROSPACE LTD	Work Order:	51358
Description: Wearplate	Part Number:	D3508-9
Inspection Dwg: D3508 **Rev:** C		Page 1 of 1

FIRST ARTICLE INSPECTION CHECKLIST

[X] First Article [ ] Prototype

Drawing Dimension	Tolerance	Actual Dimension	Accept	Reject	Method of Inspection	Comments
2.063	+/-0.010	2.069	✓			
2.813	+/-0.010	2.811	✓			
0.375	+/-0.010	.377	✓			
2.90	+/-0.030	2.902	✓			
5.800	+/-0.010	5.796	✓			
11.600	+/-0.010	11.606	✓			
17.400	+/-0.010	17.400	✓			
Ø0.188	+0.005/-0.001	.191	✓			
0.300	+/-0.010	.303	✓			
0.300	+/-0.010	.301	✓			
0.038	+/-0.010	.036	✓			

Measured by:	IB
Date:	10-1-11

Audited by:	S
Date:	10/1/11

Prototype Approval:	N/A
Date:	N/A

Rev	Date	Change	Revised by	Approved
A	08.07.24	New Issue	KJ/DD	

Dart Aerospace Ltd

W/O:		WORK ORDER CHANGES					
DATE	**STEP**	**PROCEDURE CHANGE**	**By**	**Date**	**Qty**	**Approval** Chief Eng / Prod Mgr	**Approval** QC Inspector

Part No: _____ **PAR #:** _____ **Fault Category:** _____ **NCR:** Yes No **DQA:** _____ **Date:** _____

Resolution: _____ **Disposition:** _____ **QA: N/C Closed:** _____ **Date:** _____

NCR:		WORK ORDER NON-CONFORMANCE (NCR)						
DATE	**STEP**	**Description of NC** Section A	**Corrective Action** Section B			**Verification** Section C	**Approval** Chief Eng	**Approval** QC Inspector
			Initial Chief Eng	**Action Description** Chief Eng	**Sign & Date**			

NOTE: Date & initial all entries

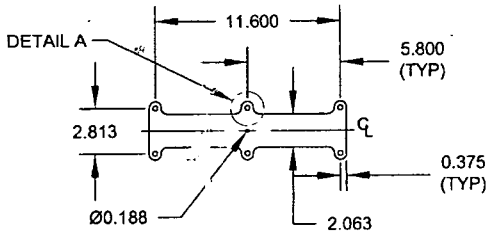

D3508-1 FLAT PATTERN

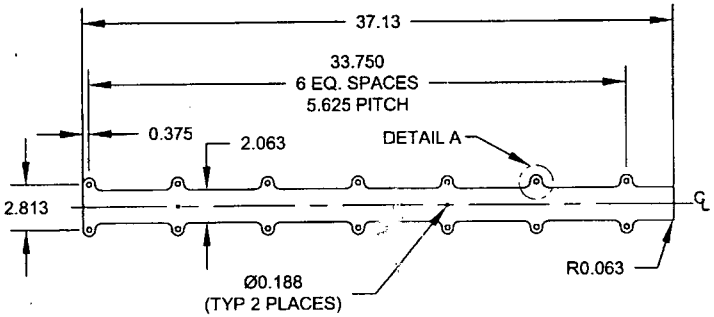

D3508-3 FLAT PATTERN

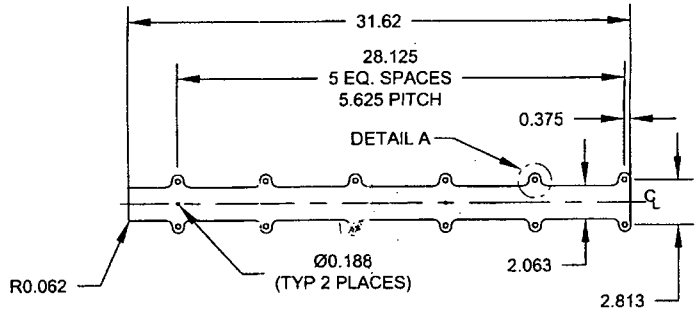

D3508-5 FLAT PATTERN

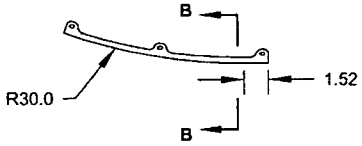

D3508-1 BENDING DETAIL
(MAKE FROM D3508-1F)

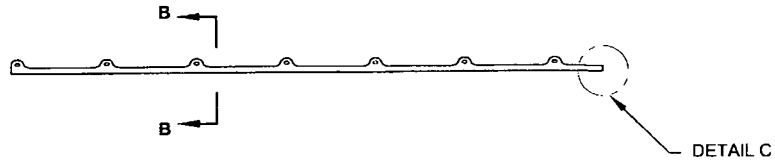

D3508-3 BENDING DETAIL
(MAKE FROM D3508-3F)

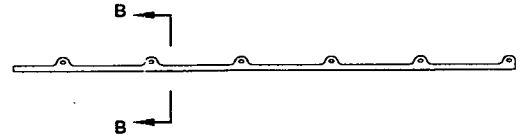

D3508-5 BENDING DETAIL
(MAKE FROM D3508-5F)

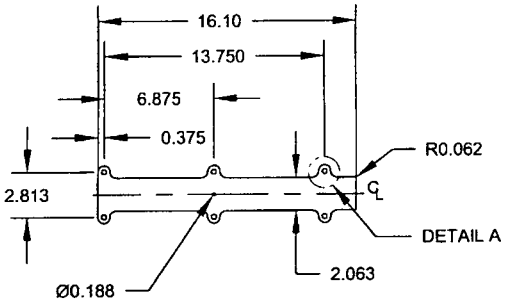

D3508-7F FLAT PATTERN

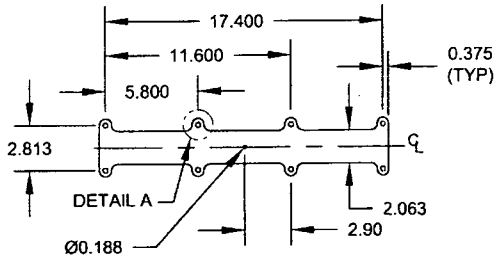

D3508-9F FLAT PATTERN

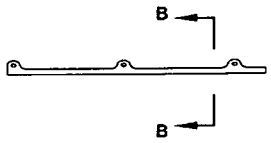

D3508-7F BENDING DETAIL
(MAKE FROM D3508-7F)

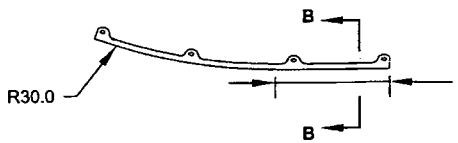

D3508-9F BENDING DETAIL
(MAKE FROM D3508-9F)

NOTES:

1) MATERIAL: AISI 304/316 SS SHEET PER AMS 5513 OR AMS 5524, 20 GAUGE (0.038 THICK)
(REF. DART MATERIAL SPEC M304S20GA)
2) FINISH: POWDER COAT GREY SANDTEX (4.3.5.6) PER DART QSI 005 4.3
3) WELD PER DART QSI 004
4) TOLERANCES: PER DART QSI 018 UNLESS OTHERWISE NOTED
5) UNITS: INCHES UNLESS OTHERWISE NOTED
6) BREAK SHARP EDGES: 0.005 TO 0.015
7) IDENTIFICATION: NONE
8) WEIGHT: D3508-1 - 0.47 lbs, D3508-3 - 0.95 lbs, D3508-5 - 0.77 lbs,
D3508-7 - 0.39 lbs, D3508-9 - 0.45 lbs, D3508-11 - 0.64 lbs
D3508-13 - 0.25 lbs

RELEASED
07.11.16

SHOP COPY
RETURN TO
ENGINEERING
UNCONTROLLED COPY
SUBJECT TO AMENDMENT
WITHOUT NOTICE
WORK ORDER
NO. 54580

REV.	DESCRIPTION	BY	DATE
C	ADD -9/-11/-13 MOVE TAB OUTBOARD (2.813 WAS 2.733) CHANGE DRAWING FORMAT	PH	07.04.20
B	CHANGE STAINLESS STEEL, WIDEN	PH	06.10.27
A	NEW ISSUE	PH	06.04.21

DESIGN		DART AEROSPACE USA, INC PORT HADLOCK, WA
DRAWN		
CHECKED		DRAWING NO. REV. C
MFG. APPR.		D3508 SHEET 1 OF 2
APPROVED		TITLE SCALE
DE APPR.		WEARPLATE 1:8
DATE	07.04.20	

COPYRIGHT © 2007 BY DART AEROSPACE USA, INC
THIS DOCUMENT IS PRIVATE AND CONFIDENTIAL AND IS SUPPLIED ON THE EXPRESS CONDITION THAT IT IS NOT TO BE USED FOR ANY PURPOSE OR COPIED OR COMMUNICATED TO ANY OTHER PERSON WITHOUT WRITTEN PERMISSION FROM DART AEROSPACE USA, INC.

09-12-14

Dart Aerospace Ltd

W/O:		WORK ORDER CHANGES					
DATE	**STEP**	**PROCEDURE CHANGE**	**By**	**Date**	**Qty**	**Approval** Chief Eng / Prod Mgr	**Approval** QC Inspector

Part No: _____ **PAR #:** _____ **Fault Category:** _____ **NCR:** Yes No **DQA:** _____ **Date:** _____

Resolution: _____ **Disposition:** _____ **QA: N/C Closed:** _____ **Date:** _____

NCR:		WORK ORDER NON-CONFORMANCE (NCR)						
DATE	**STEP**	**Description of NC** Section A	**Corrective Action** Section B			**Verification** Section C	**Approval** Chief Eng	**Approval** QC Inspector
			Initial Chief Eng	**Action Description** Chief Eng	**Sign & Date**			

NOTE: Date & initial all entries

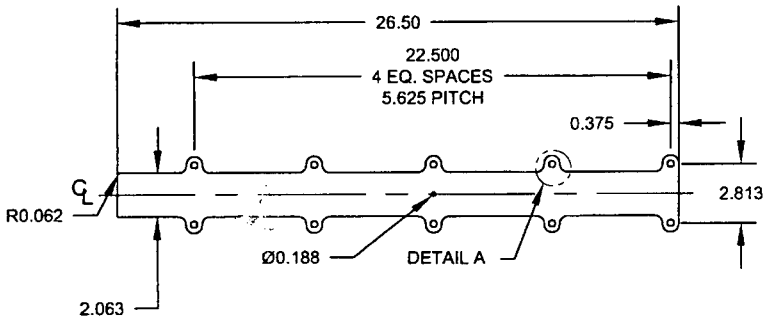

D3508-11F FLAT PATTERN

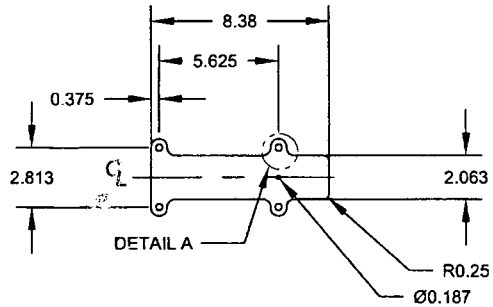

D3508-13F FLAT PATTERN

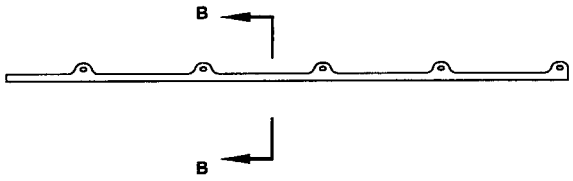

D3508-11 BENDING DETAIL
(MAKE FROM D3508-11F)

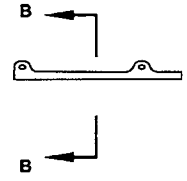

D3508-13 BENDING DETAIL
(MAKE FROM D3508-13F)

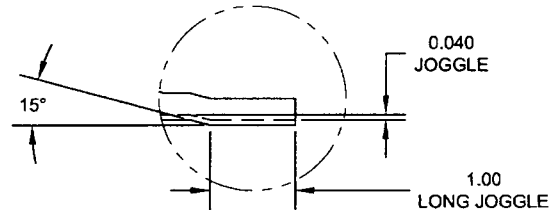

DETAIL C
(SCALE 1:2)

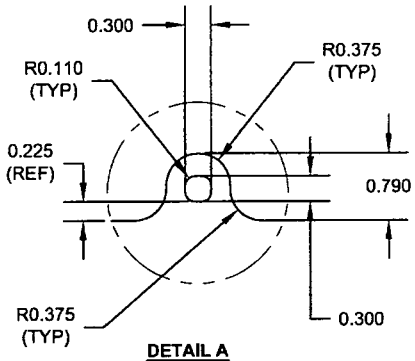

DETAIL A
(SCALE 2:3)

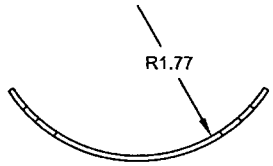

SECTION B-B
(SCALE 2:3)

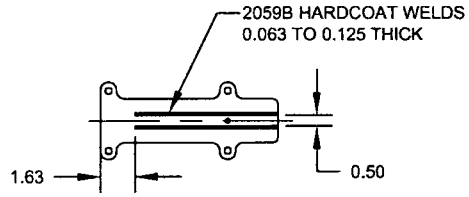

D3508-13 WELDING DETAIL

RELEASED
07.11.16

W/O 54580

DESIGN	PH	**DART AEROSPACE USA, INC**
DRAWN	PH	PORT HADLOCK, WA
CHECKED		DRAWING NO. REV. C
MFG. APPR.		D3508 SHEET 2 OF 2
APPROVED		TITLE SCALE
DE APPR.		WEARPLATE 1:6
DATE 07.04.20		

COPYRIGHT © 2007 BY DART AEROSPACE USA, INC
THIS DOCUMENT IS PRIVATE AND CONFIDENTIAL AND IS SUPPLIED ON THE EXPRESS CONDITION THAT IT IS NOT TO BE USED FOR ANY PURPOSE OR COPIED OR COMMUNICATED TO ANY OTHER PERSON WITHOUT WRITTEN PERMISSION FROM DART AEROSPACE USA, INC.

Dart Aerospace Ltd

W/O:		WORK ORDER CHANGES					
DATE	**STEP**	**PROCEDURE CHANGE**	**By**	**Date**	**Qty**	**Approval** Chief Eng / Prod Mgr	**Approval** QC Inspector

Part No: _____ **PAR #:** _____ **Fault Category:** _____ **NCR:** Yes No **DQA:** _____ **Date:** _____

Resolution: _____ **Disposition:** _____ **QA: N/C Closed:** _____ **Date:** _____

NCR:		WORK ORDER NON-CONFORMANCE (NCR)						
DATE	**STEP**	**Description of NC** Section A	**Corrective Action** Section B			**Verification** Section C	**Approval** Chief Eng	**Approval** QC Inspector
			Initial Chief Eng	**Action Description** Chief Eng	**Sign & Date**			

NOTE: Date & initial all entries